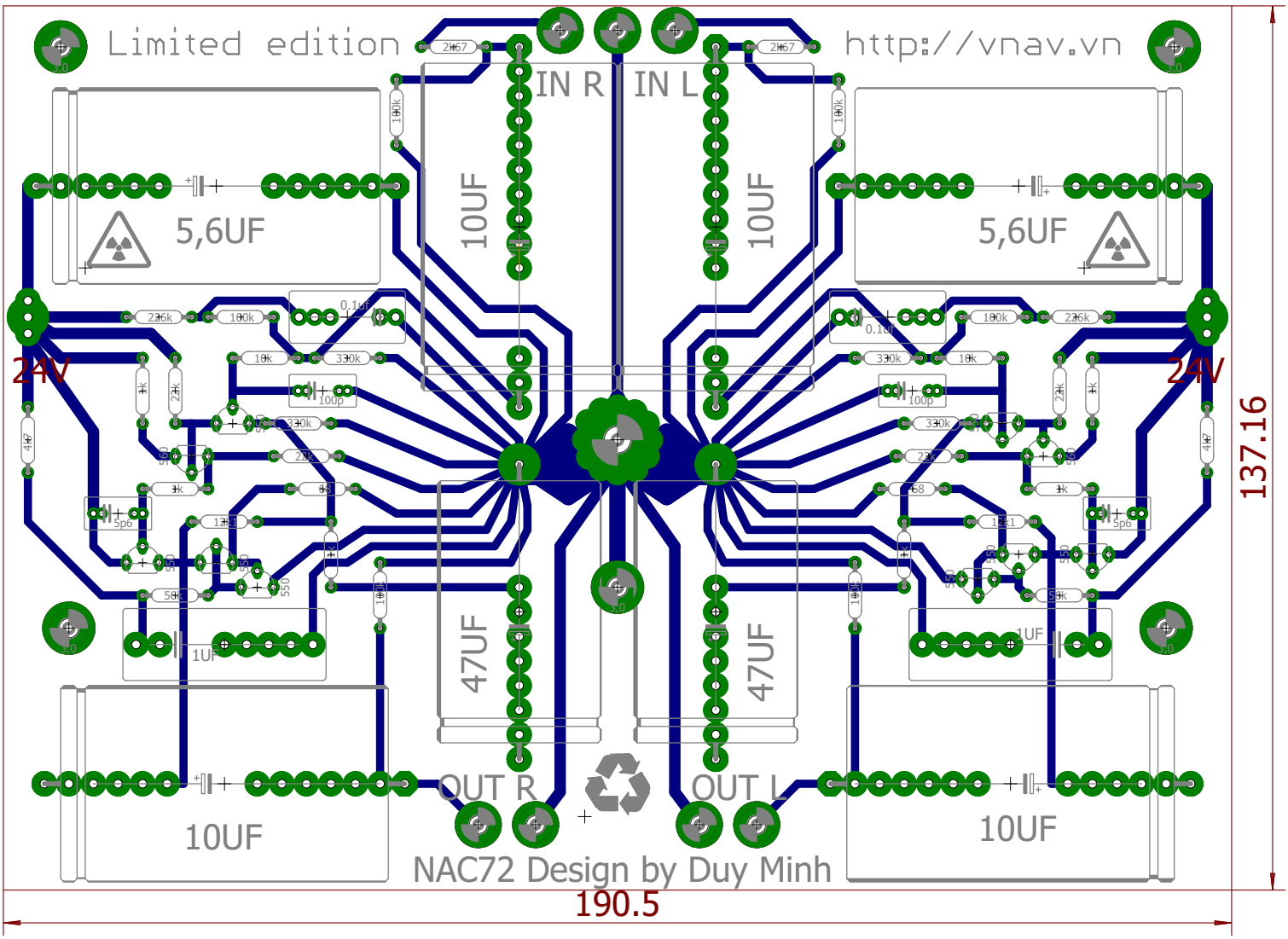

30/09/2015 8:19 CH C:\Users\way\Documents\eagle\nac72kien\nac72\nac723.brd