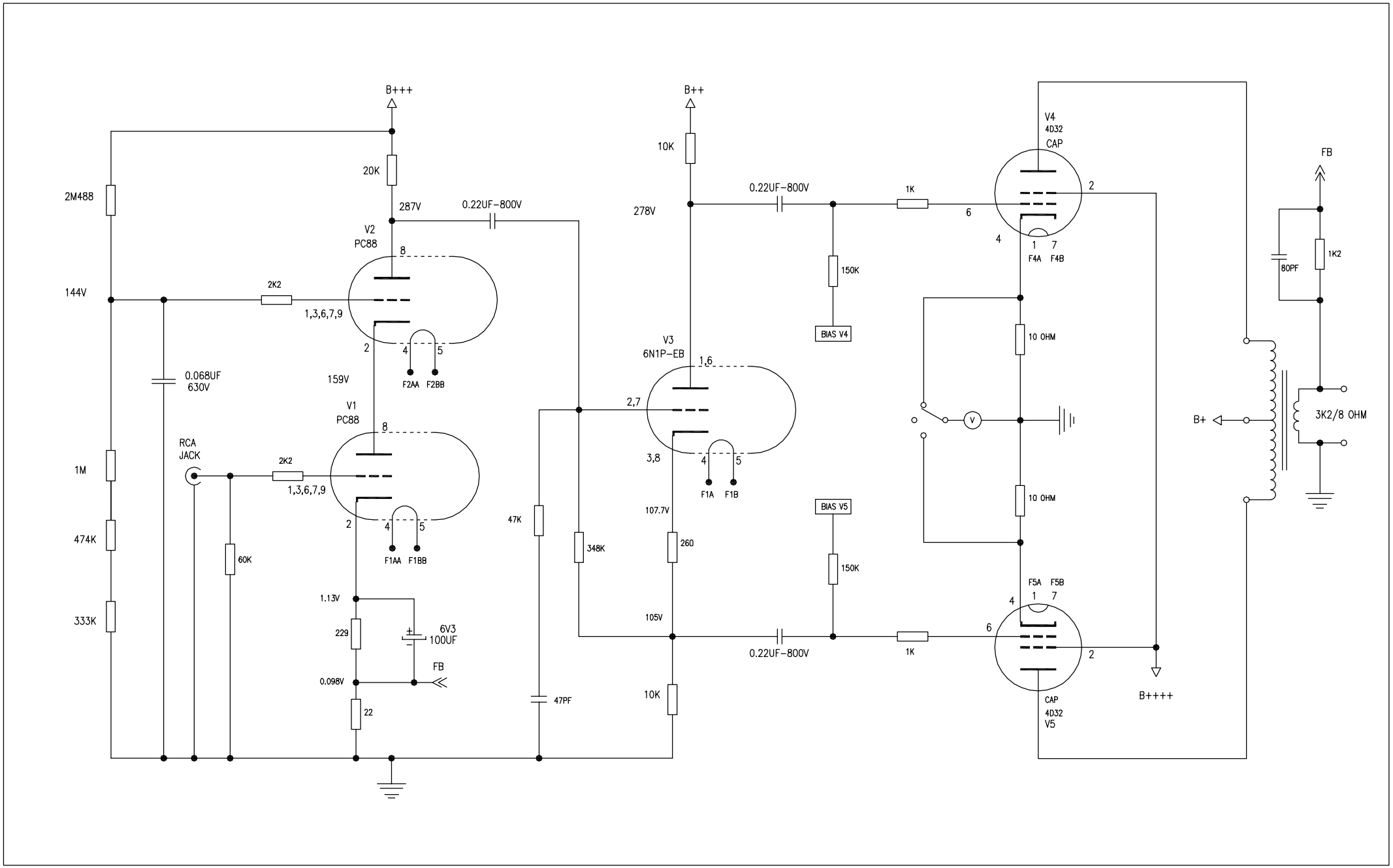
B+++
B++
20K
10K
2M488
287V
0.22UF-800V
278V
V2
PC88
V3
6N1P-EB
V4
4D32
CAP
144V
2K2
1,3,6,7,9
150K
BIAS V4
10 OHM
0.068UF
630V
159V
F2AA F2BB
V1
PC88
F1A F1B
RCA
JACK
1M
F1AA F1BB
47K
348K
107.7V
260
BIAS V5
F5A F5B
474K
60K
1.13V
6V3
100UF
105V
333K
229
FB
0.098V
22
47PF
B++++
CAP
4D32
V5
80PF
1K2
B+
3K2/8 OHM