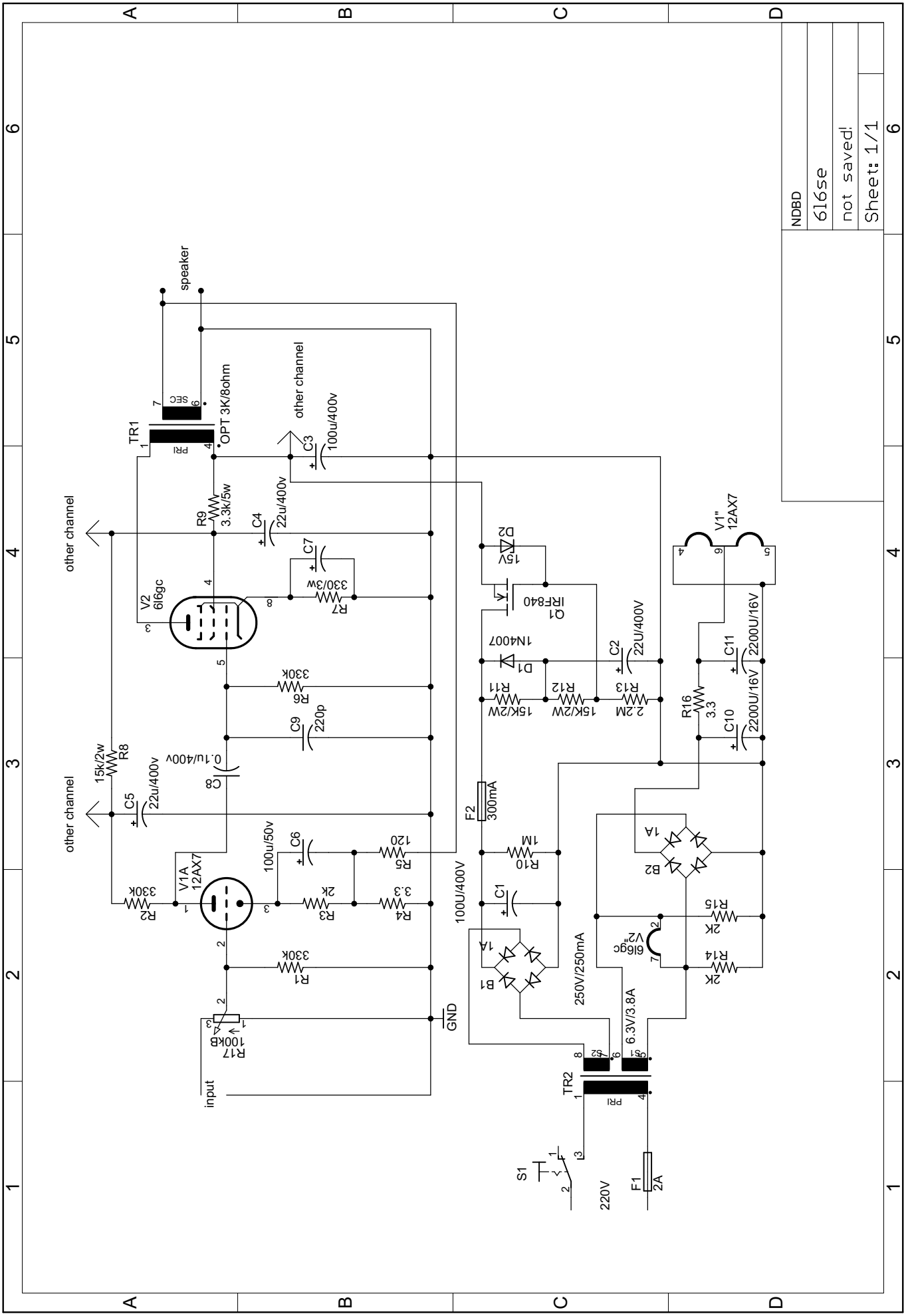

7/29/2012 11:01:44 AM E:\6l6se.sch (Sheet: 1/1)