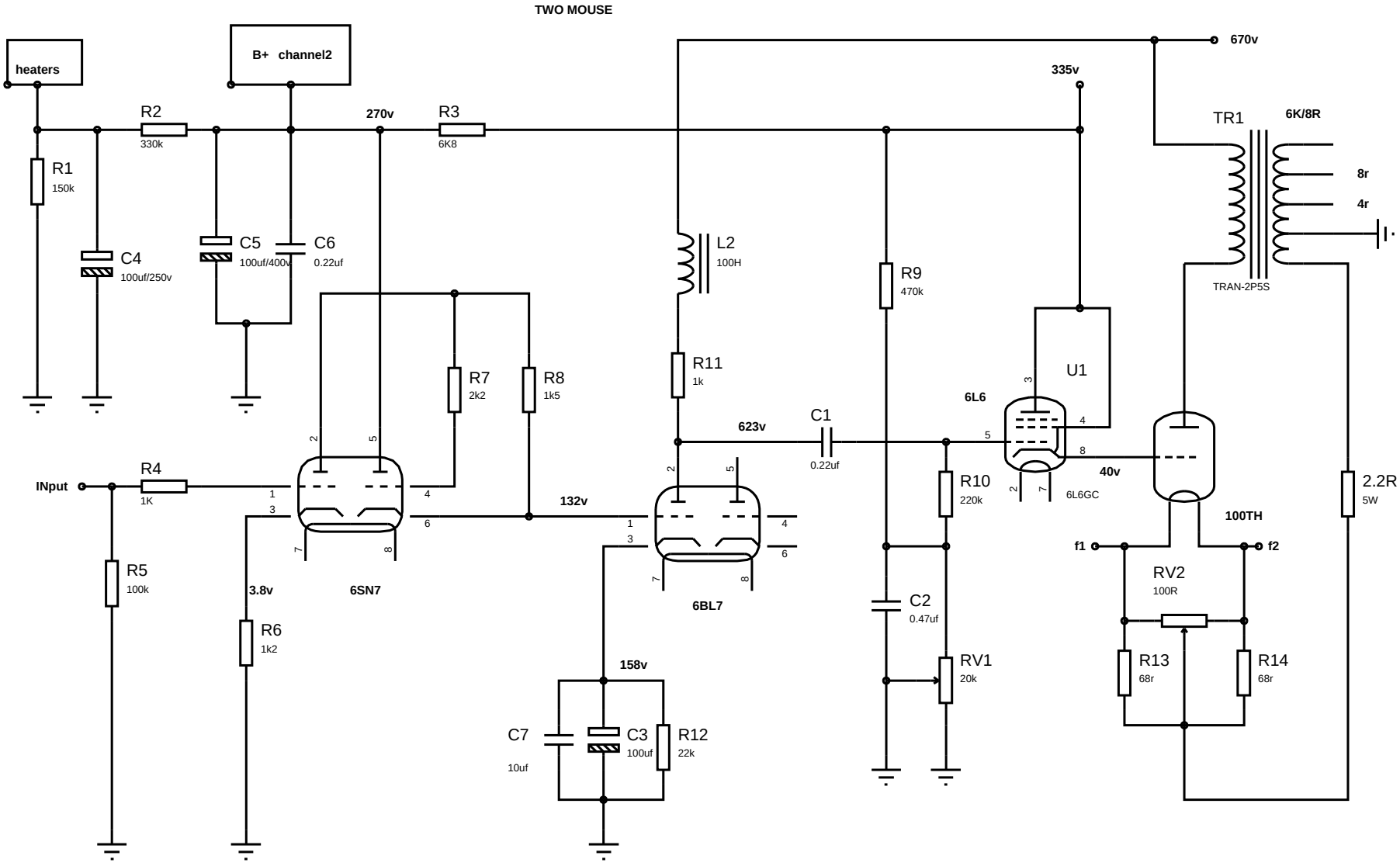
TWO MOUSE
heaters
B+ channel2
670v
335v
R2
330k
270v
R3
6K8
TR1
6K/8R
8r
4r
R1
150k
C4
100uf/250v
C5
100uf/400v
C6
0.22uf
L2
100H
R9
470k
TRAN-2P5S
R7
2k2
R8
1k5
R11
1k
U1
6L6
623v
C1
0.22uf
INput
R4
1K
132v
R10
220k
6L6GC
40v
2.2R
5W
100TH
f1
f2
R5
100k
3.8v
6SN7
6BL7
RV2
100R
C2
0.47uf
R6
1k2
158v
RV1
20k
R13
68r
R14
68r
C7
10uf
C3
100uf
R12
22k